300 PSI

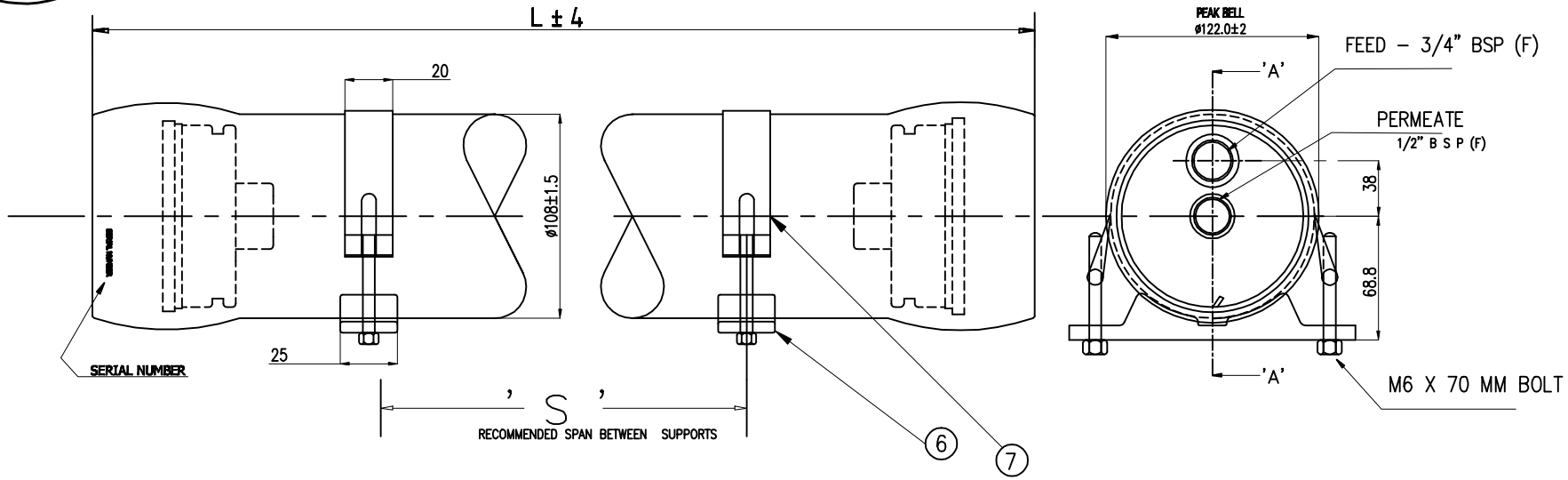

DWG.REF	QTY.	PART NO.	DESCRIPTION	MATERIALS
HOUSING SHELL				
1	1		PRESSURE VESSEL	FILEMENT WOUND WITH EPOXY/FIBER GLASS
END CAP ASSEMBLY				
2	2		END CAP	ENGINEERING THERMOPLASTIC
3	2		HEAD SEAL	EPDM
4	8		END CAP SEAL	EPDM
END CAP LOCKING				
5	2		RETAINING RING	304 SS
PRESSURE VESSEL SUPPORT				
6	2		SADDLE	PE MATERIAL
7	2		STRAP ASSEMBLY	304 SS WITH CUSHION

SHELL LENGTH CODE	MODEL	L OVER ALL LENGTH MM	S SPAN MM	APPROX. ASSEMBLY WEIGHT KG
1	40–40–EP	1120	730	6
2	40–80–EP	2138	1275	9
3	40–120–EP	3154	1796	12

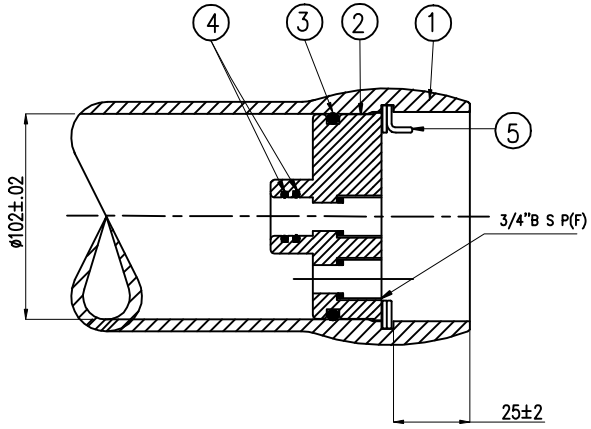

WARNING :–

INCORRECT MAN HOLDING WILL CAUSE SEVER
LOCAL STRESS AROUND PORT AND MAY RESULT
IN LEAKS AND PREMATURE FAILURE
TAKE EVERY PRECAUTION MENTIONED IN USER MANUAL

SPECIFICATION SUBJECT TO CHANGE WITHOUT NOTICE

NOTES:

DIMENSION IN MM
FOR REFERENCE ONLY NOT TO BE USED FOR CONSTRUCTION UNLESS CERTIFIED
CENTER VESSEL ON 2 /3 SUPPORTS AT SPAN "S"
** 3 SUPPORTS REQUIRED FOR LENGTH –4 ABOVE

INTERNAL PERMEATE PRESSURE NOT EXCEED 125 PSI
EXTERIOR OF MEMBRANE HOUSING COATED WITH HIGH GLOSS POLYURATHENE PAINT

DAX

				DRAWN : IP	TITLE : RO PRESSURE VESSEL	
				CHECKED : GMR		
				APPROVED : GMR	MODEL : 40–300 END PORT	
0	FIRST SUBMISSION	RP	22.11.17	SCALE : NTS	PROJECT :	DRG NO : 4300EP — REV
REV.	REVISION	BY	DATE	DATE : 22.11.17	CLIENT :	PART NO : – — SHEET NO : 1 OF 1 — 0

FILE